REV	DESCRIPTION	DATE

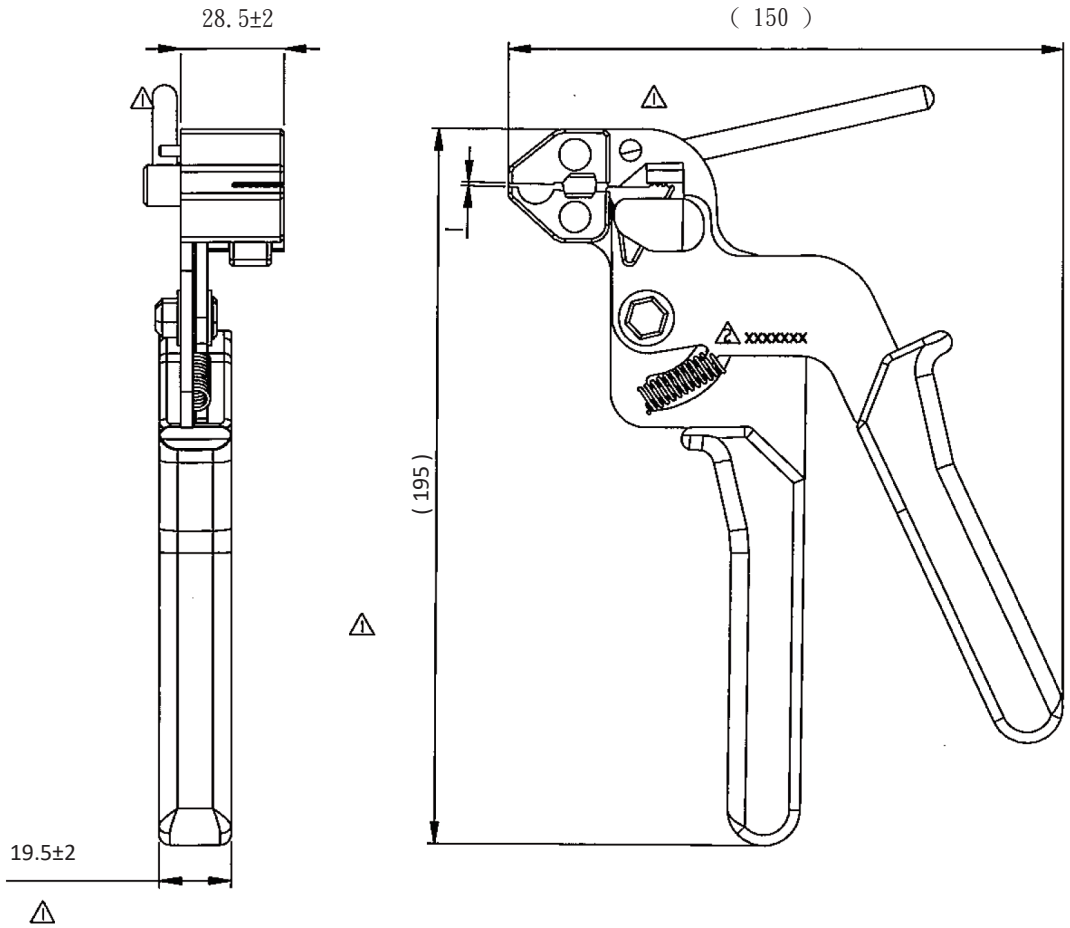

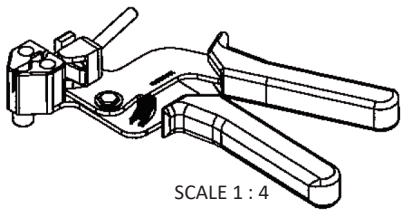

NOTE:
STEEL TIE GUN FOR TENSIONING AND CUT OFF BALL LOCK TYPE AND LADDER TYPE IN ALL SIZE OF WIDTH.

RoHS Compliant

DRAWN: RYAN	Tolerance Unless Otherwise Specified	CnC Tech Industrial Cable and Connector Technology
CHECKED: SCOTT	REV: 1-0	
	UNIT: mm	DESCRIPTION: STEEL TIE GUN
	SCALE: 1 : 2	
APPROVAL: JEFF	SHEET: 1-0	PART NO: DL - 109 - SST
	DATE: 2024/06/08	